东莞市达盛舵机科技有限公司

Dongguan City Dsservo Technology Co.,Ltd

产品规格书(Product datasheet)

产品型号 (Product Name): DES-110-12V (Black)

产品描述 (Product Description): 12V 110kg Digital Servo

产 品 图 (Drawing)

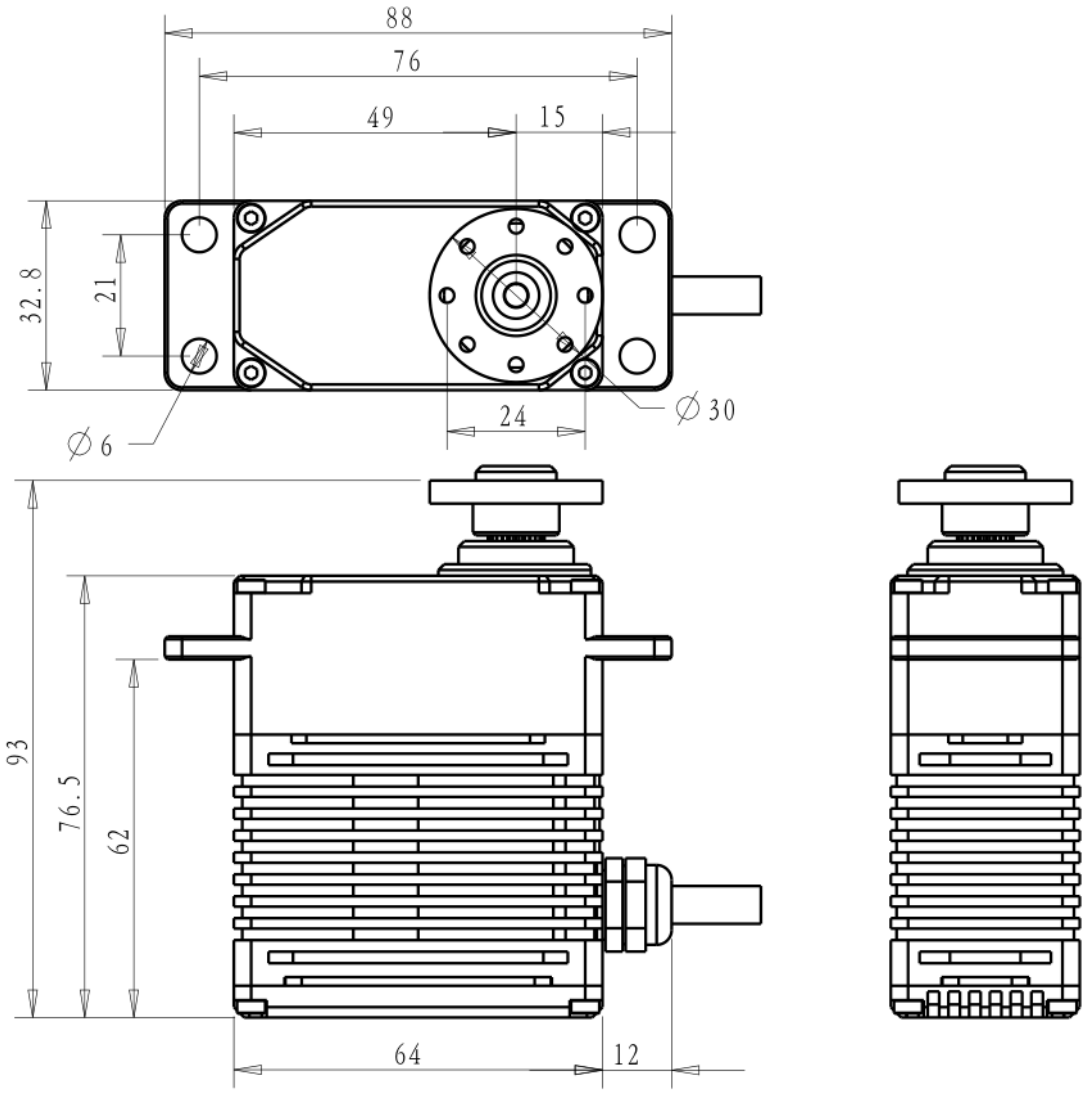

1. 使用环境条件 Apply Environmental Condition

No.	Item	Specification
1-1	存储温度 Storage Temperature Range	-50℃～80℃
1-2	运行温度 Operating Temperature Range	-40℃～75℃
1-3	工作电压范围 Operating Voltage Range	8.4-16.8V

2. 机械特性 Mechanical Specification

No.	Item	Specification
2-1	尺寸 Size	64*32.8*76.5mm
2-2	重量 Weight	450g

2-3	齿轮比 Gear ratio	223
2-4	轴承 Bearing	Double bearing
2-5	舵机线 Connector wire	500±5mm
2-6	防水性能 Waterproof performance	IP67

3. 电气特性 Electrical Specification

No.	工作电压 Operating Voltage	8.4V	12V	16.8V
3-1	空载转速 Operating speed (at no load)	0.22 sec/60°	0.19 sec/60°	0.16sec/60°
3-2	堵转扭矩 Stall Torque (at locked)	155 kg-cm	220 kg-cm	265 kg-cm
3-3	额定扭矩 Rate Torque	55 kg-cm	75 kg-cm	90 kg-cm
3-4	堵转电流 Stall current (at locked)	5.6A	8A	11.2A
3-5	空载电流 Runing current(at no lad)	300mA	350mA	400mA
3-6	静态电流 Idle current(at stopped)	50mA	50mA	50mA

4. 控制特性 Control Specification

No.	Item	Specification
4-1	驱动方式 Control System	PWM(Pulse width modification)
4-2	脉宽范围 Pulse width range	500～2500μsec
4-3	中点位置 Neutral position	1500μsec
4-4	控制角度 Running degree	200° (when 500～2500 μ sec)
4-5	电机类型 Motor Type	Brushless Motor
4-6	编码器类型 Encoder Type	Magnetic Encoder
4-7	控制精度 Dead band width	1 μsec
4-8	角度精度 Angle Accuracy	±1°
4-9	控制频率 Operating frequency	50-330Hz
4-10	旋转方向 Rotating direction	Counterclockwise (when 500～2500 μsec)

5. 关于 PWM 控制说明 About PWM Control

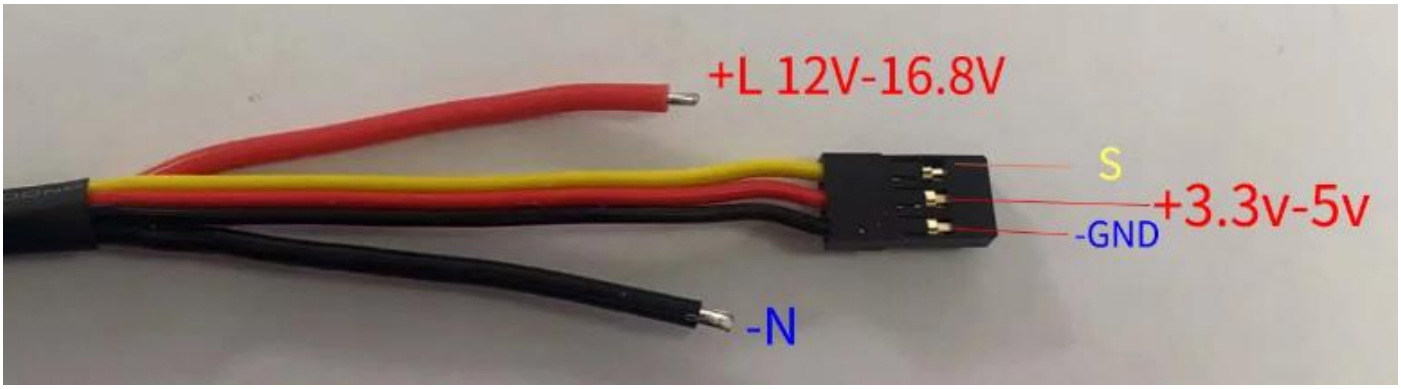

更多的舵机规格书和 3D 模型，请到网站下载(For more servo datasheet and 3D files, please go to the website to download) www.dsservo.com