东莞市达盛舵机科技有限公司

Dongguan City Dsservo Technology Co.,Ltd

产品规格书(Product datasheet)

产品型号 (Product Name): BLS51180-12V (Black)

产品描述 (Product Description): 12V 180kg RC Digital Servo

产 品 图 (Drawing)

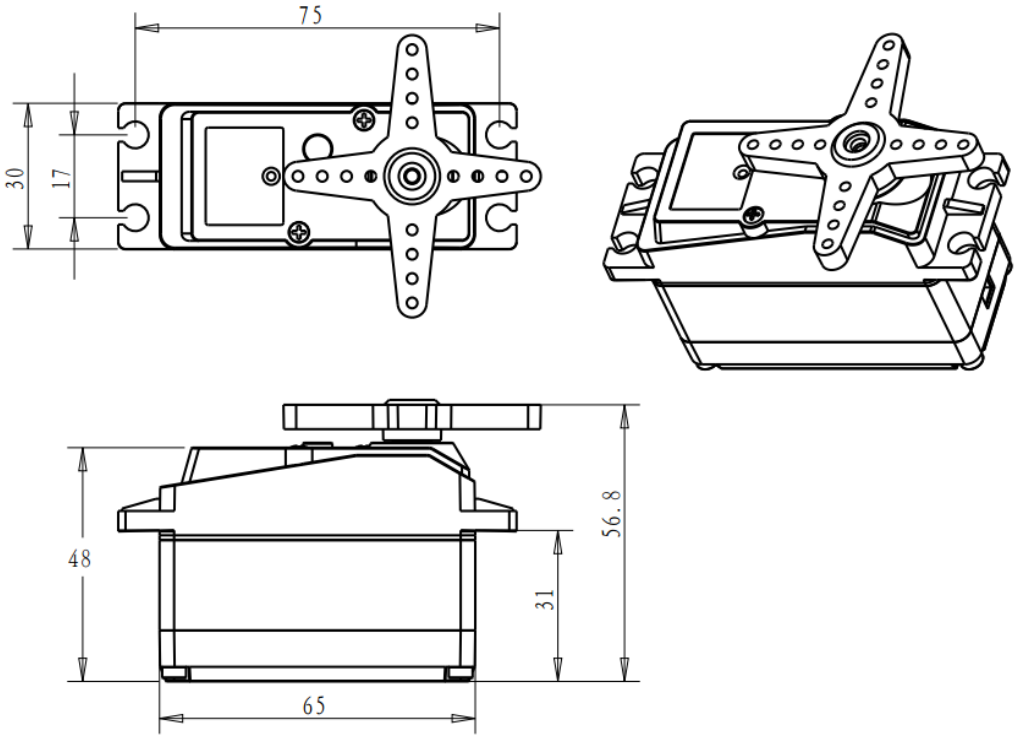

1. 使用环境条件 Apply Environmental Condition

No.	Item	Specification
1-1	存储温度 Storage Temperature Range	-30℃～80℃
1-2	运行温度 Operating Temperature Range	-15℃～70℃
1-3	工作电压范围 Operating Voltage Range	9.6-12.6V

2. 机械特性 Mechanical Specification

No.	Item	Specification
2-1	尺寸 Size	65*30*48mm
2-2	重量 Weight	175g
2-3	齿轮比 Gear ratio	357
2-4	轴承 Bearing	Double bearing
2-5	舵机线 Connector wire	300±5mm
2-6	马达 Motor	3-pole(s)
2-7	防水性能 Waterproof performance	IP67

更多的舵机规格书和 3D 模型，请到网站下载(For more servo datasheet and 3D files, please go to the website to download) www.dsservo.com

3. 电气特性 Electrical Specification

No.	工作电压 Operating Voltage	9.6V	12V	12.6V
3-1	待机电流 Idle current(at stopped)	4mA	5mA	6mA
3-2	空载转速 Operating speed (at no load)	0.24 sec/60°	0.21 sec/60°	0.19sec/60°
3-3	堵转扭矩 Stall torque (at locked)	120 kg-cm	145 kg-cm	160 kg-cm
3-4	堵转电流 Stall current (at locked)	8.5A	10.5A	11.5A

4. 控制特性 Control Specification

No.	Item	Specification
4-1	驱动方式 Control System	PWM(Pulse width modification)
4-2	脉宽范围 Pulse width range	500～2500μsec
4-3	中点位置 Neutral position	1500μsec
4-4	控制角度 Running degree	180° or 270° (when 500～2500 μ sec)
4-5	控制精度 Dead band width	3 μsec
4-6	控制频率 Operating frequency	50-330Hz
4-7	旋转方向 Rotating direction	Counterclockwise (when 500～2500 μsec)

5. 关于 PWM 控制说明 About PWM Control



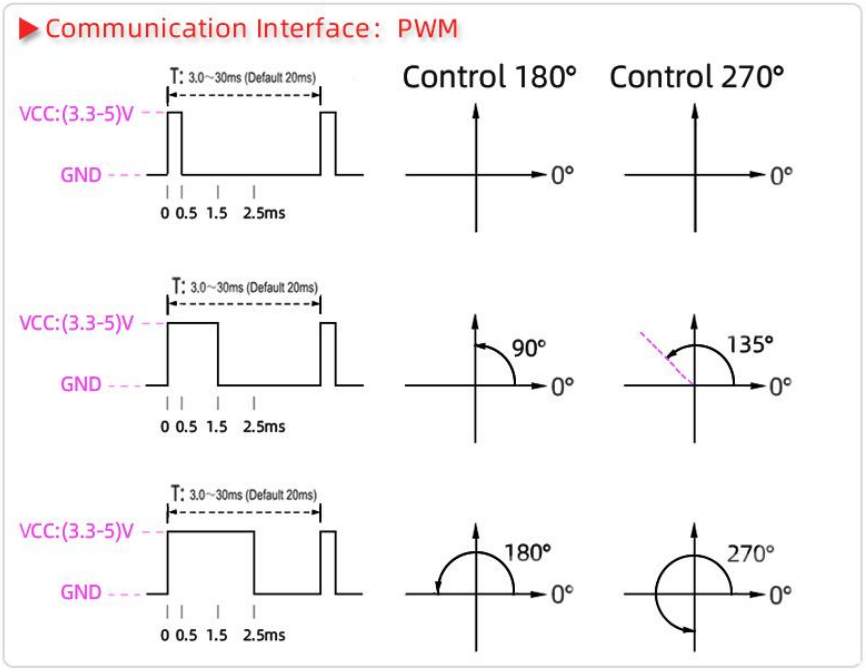

更多的舵机规格书和 3D 模型，请到网站下载(For more servo datasheet and 3D files, please go to the website to download) www.dsservo.com