## describe

BL8310 is a low-voltage DC motor driver chip specially designed for low-voltage operating systems . Integrates 4 low-resistance MOS and forward, reverse, brake and stop functions. BL8310 has a built-in temperature protection function. When an output short circuit occurs, the output current increases instantaneously, the power consumption of the circuit rises sharply, and the chip temperature rises sharply. When the chip temperature exceeds the maximum temperature set by the internal temperature protection circuit, the internal circuit shuts down. Cut off the built-in power switch tube and cut off the load current.

## application

- consumer products
- Water and gas meter products
- Toy
- electric toothbrush

## characteristic

- Operating voltage range: 2.0-6.8V
- Low operating current (typ. 70uA)
- Low standby current (typ. 0.1uA)
- Continuous working current 1.0A
- Thermal protection with integrated hysteresis
- encapsulation D FN 8 (2x 2 ) S OP8

## Typical Application Diagram

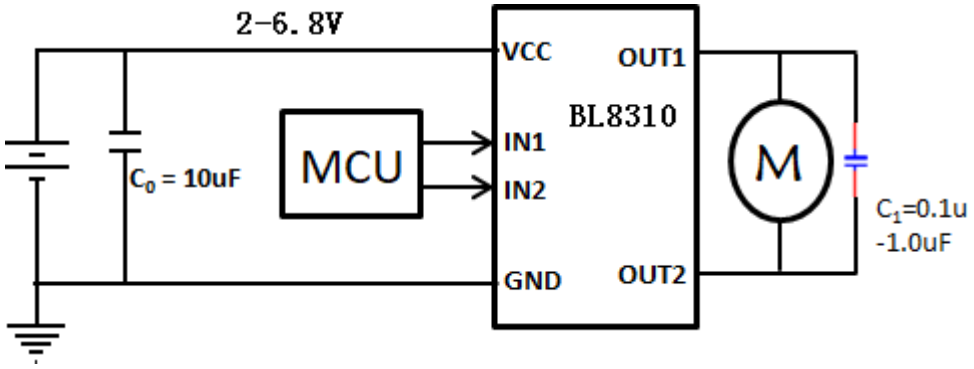


## Ordering Information

| model | encapsulation | quantity | Working temperature °C |
|---|---|---|---|
| BL8310MD | DFN2X2-8 | 3000 | -40~85 |
| BL8310MDS | SOP8 | 4000 | -40~85 |

## Pin definition

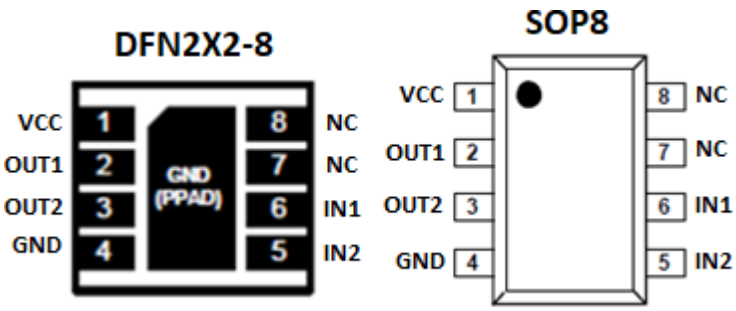

| No. | name | TYPE (1) | DESCRIPTION |
|---|---|---|---|
| 1 | VCC | VCC | Power input pin, connect a 1uF or larger capacitor between VCC and ground |
| 2 | OUT1 | o | Output 1, directly connect a 0.1uF or larger capacitor between OUT1 and OUT2 |
| 3 | OUT2 | o | Output 2, directly connect a 0.1uF or larger capacitor between OUT1 and OUT2 |
| 4 | GND | P | land |
| 5 | IN2 | I | Logic input 2 |
| 6 | IN1 | I | Logic input 1 |
| 7 | NC | NC | Dangling feet |
| 8 | NC | NC | Dangling feet |

## absolute maximum rating

| parameter | | the smallest | maximum | unit |
|---|---|---|---|---|
| voltage | VCC | -0.3 | 7.0 | V |
| Input voltage | IN1, IN2 | -0.3 | 7.0 | |
| Static Protection (Human Body Model) | VCC, IN1, IN2, OUT1, OUT2 | | 2 | KV |
| Operating temperature | $T_J$ | -40 | 150 | °X – |
| storage temperature | $T_{stg}$ | -65 | 150 | |
| thermal resistance | DFN8 package $\theta_{JA}$ | | 61 | °C/W |
| | SOP8 package $\theta_{JA}$ | | 130 | |

## Recommended scope of work

| parameter | | the smallest | maximum | unit |
|---|---|---|---|---|
| voltage | VCC | 2.0 | 6.8 | V |
| Input voltage | IN1, IN2 | 2.0 | 6.8 | |
| Output current | IOUT1, IOUT2 | 0 | 1 | A |

## Electrical Characteristics ($V_{CC}$=3.6V, Ta=25 °C, $R_{LOAD}$=20)

| parameter | | Test Conditions | minimum value | typical value | maximum value | unit |
|---|---|---|---|---|---|---|
| On-resistance | | | | | | |
| output impedance | $R_{DSON}$ | $I_{OUT}$=100mA | | 0.70 | 0.84 | Ω |
| | | $I_{OUT}$=400mA | | 0.72 | 0.86 | |
| **IN1/IN2** | | | | | | |
| High level input voltage | $V_{INH}$ | | 1.2 | | $V_{CC}$ | V |
| Low level input voltage | $V_{INL}$ | | 0 | | 0.7 | |
| High level input current | $I_{INH}$ | | | 2.5 | 5.0 | uA |
| Low level input current | $I_{INL}$ | | | 0 | 1 | |
| Pull-down resistor | $R_{PD}$ | | | 1.5 | 2.5 | MΩ |
| Working current | | | | | | |
| Circuit shutdown current | $I_{CC\_OFF}$ | IN1=IN2=0 | | 0 | 1 | uA |
| Circuit working current | $I_{CC\_ON}$ | IN1=IN2=3.6V;<br>IN1=3.6V, IN2=0;<br>IN1=0, IN2=3.6V; | | 65 | 100 | |
| over temperature protection | | | | | | |
| | $T_{OTSD}$ | | | 160 | | °C |
| | $T_{HYS}$ | | | 25 | | |

## Functional block diagram

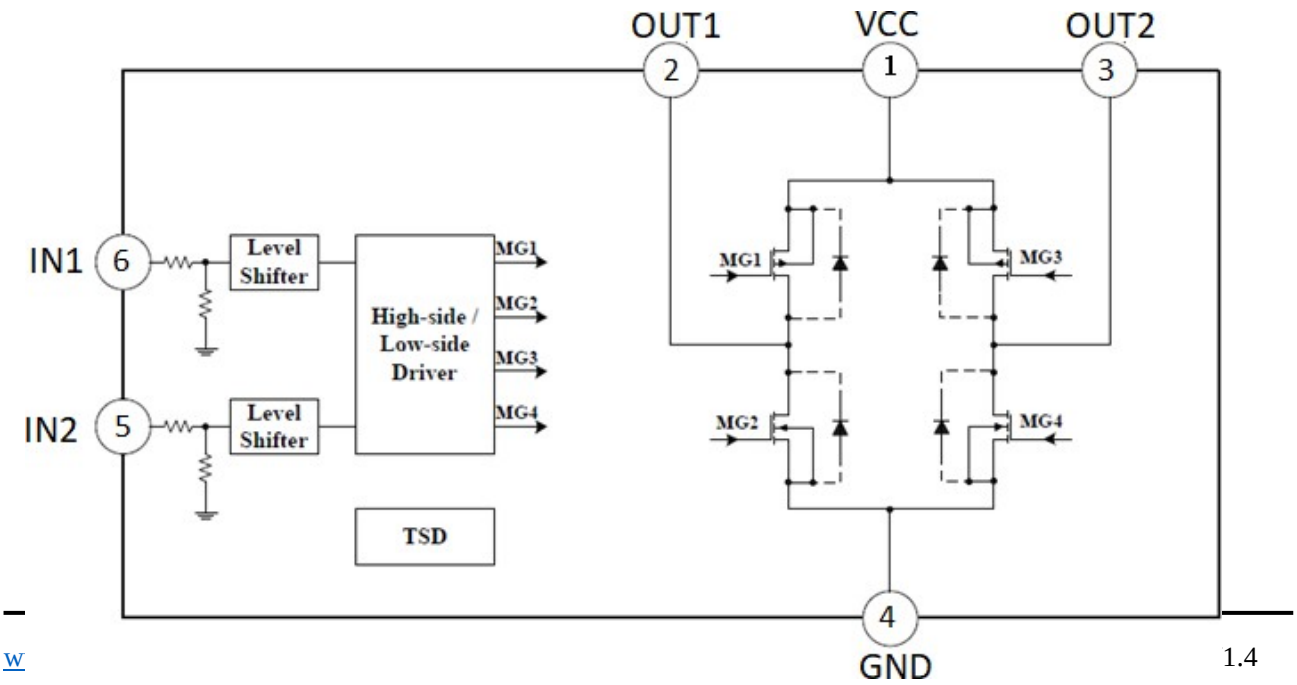

## Typical Electrical Properties

VCC=5V, IN1=High VCC=6.8V IN1=High

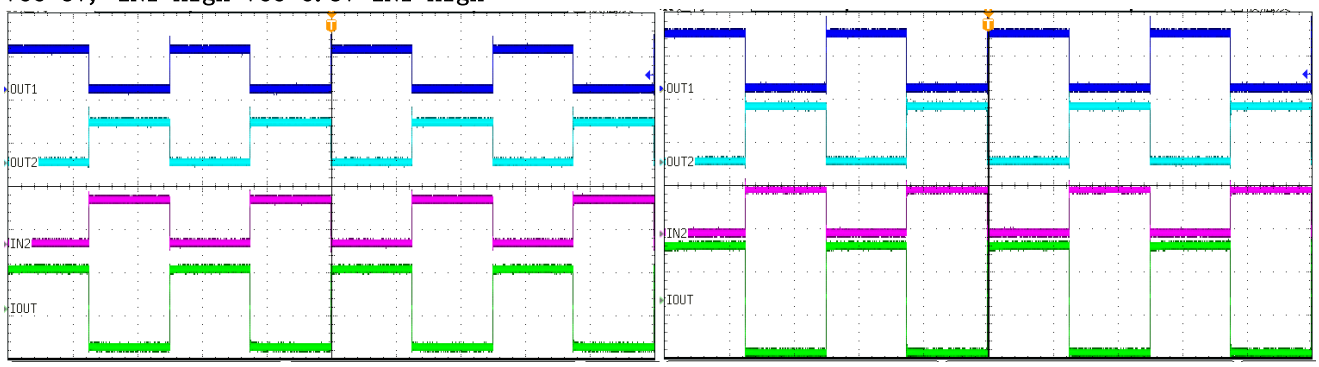


VCC=5V, Io=0.5A, IN1=High

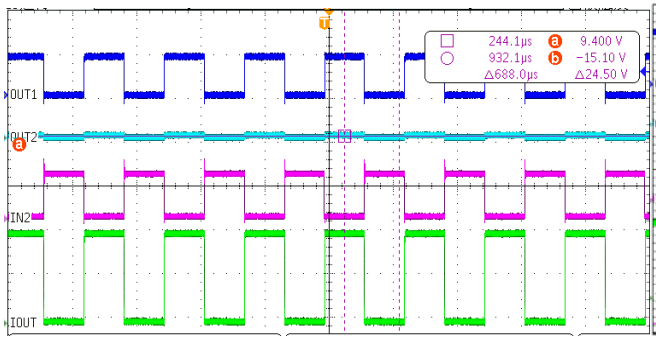


VCC=6.8V, Io=0.5A, IN1=High

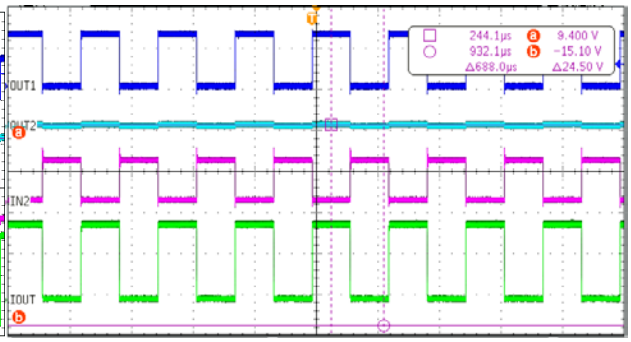


VCC=5V, IN1=-IN2, 100KHZ

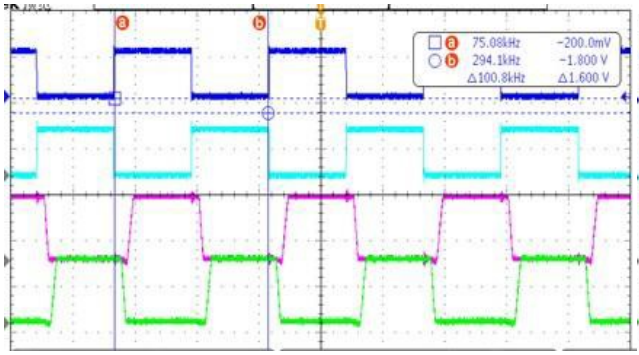


VCC=5V, IN1=-IN2, 250KHZ

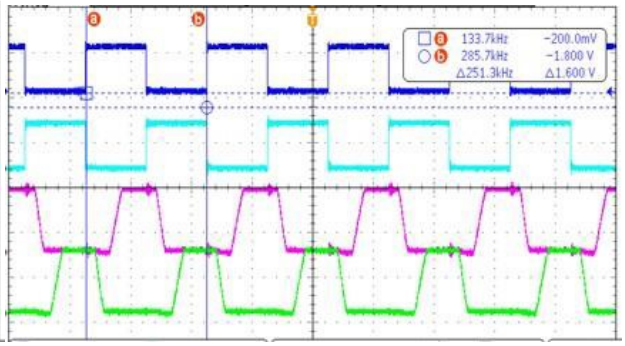

## Timing diagram

$V_{CC}$=5V, Ta=25 °C, $R_{LOAD}$=20

| Time | Parameter | Max | unit |
|---|---|---|---|
| t1 | Output enable time | 0.9 | us |
| t2 | Output disable time | 0.3 | us |
| t3 | Delay time, INx high to OUTx high | 0.6 | us |
| t4 | Delay time, INx low to OUTx low | 1.2 | us |
| t5 | Output rise time | 0.2 | us |
| t6 | Output fall time | 0.2 | us |

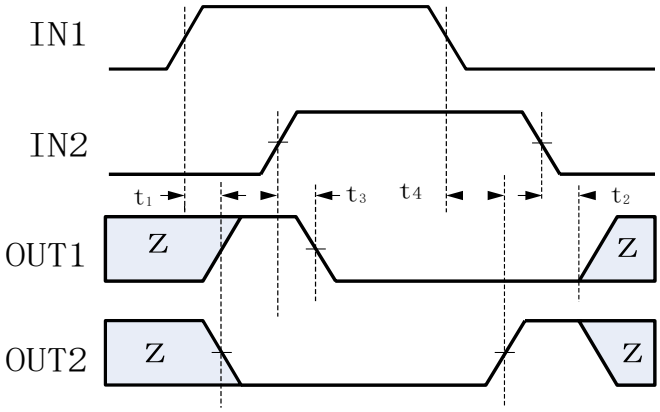


(a)

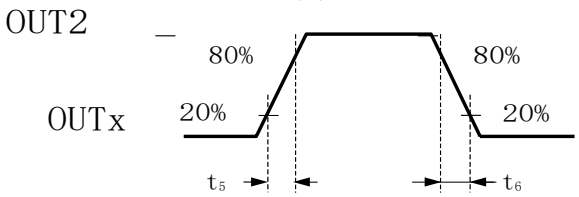


(b)

## Input-Output Logic Table

| IN1 | IN2 | OUT1 | OUT2 | working status | Working current |
|---|---|---|---|---|---|
| L | L | Hi-Z | Hi-Z | standby | $I_{CC\_OFF}$ |
| h | L | h | L | go ahead | $I_{CC\_ON}$ |
| L | h | L | h | step back | $I_{CC\_ON}$ |
| h | h | L | L | brake | $I_{CC\_ON}$ |

## Input-Output Waveform

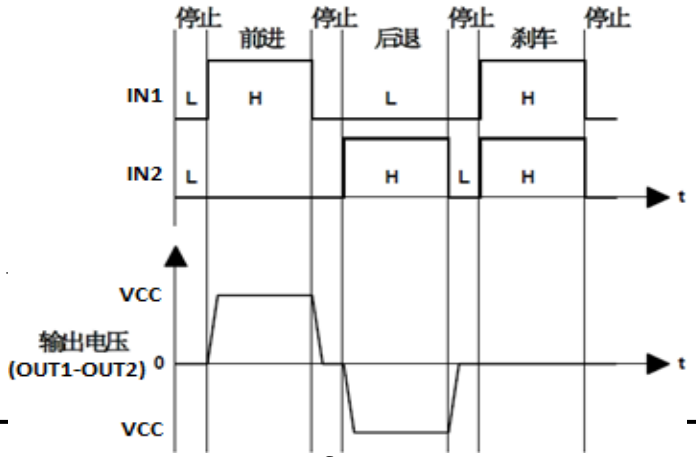

## Package Outline Dimensions

DFN2X2

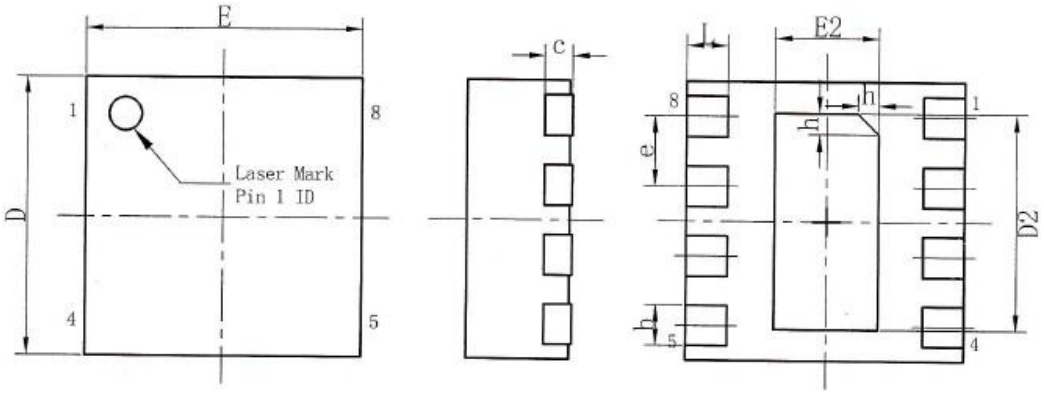


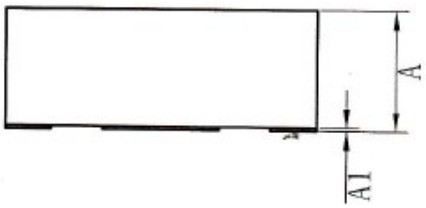


| 尺寸 / 标注 | 最小(mm) | 标准(mm) | 最大(mm) | 尺寸 / 标注 | 最小(mm) | 标准(mm) | 最大(mm) |
|---|---|---|---|---|---|---|---|
| A | 0.70 | 0.75 | 0.80 | e | 0.50BSC | | |
| A1 | 0.00 | 0.02 | 0.05 | E | 1.95 | 2.00 | 2.05 |
| b | 0.18 | 0.29 | 0.30 | E2 | 0.70 | 0.75 | 0.80 |
| c | 0.20REF | | | L | 0.25 | 0.30 | 0.35 |
| D | 1.95 | 2.00 | 2.05 | h | 0.10 | 0.15 | 0.20 |
| D2 | 1.50 | 1.55 | 1.60 | | L/F载体尺寸 (mm):1.00*1.80 | | |

# SOP8

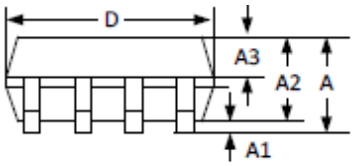


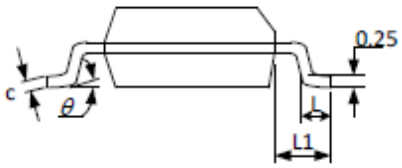


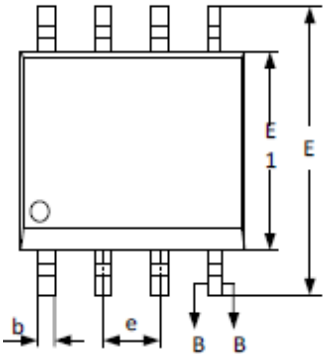


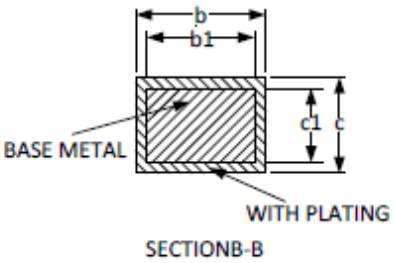

| SYMBOL | MILLIMETER | | |
|---|---|---|---|
| | MIN | NOM | MAX |
| A | -- | -- | 1.77 |
| A1 | 0.08 | 0.18 | 0.28 |
| A2 | 1.20 | 1.40 | 1.60 |
| A3 | 0.55 | 0.65 | 0.75 |
| b | 0.39 | -- | 0.48 |
| b1 | 0.38 | 0.41 | 0.43 |
| c | 0.21 | -- | 0.26 |
| c1 | 0.19 | 0.20 | 0.21 |
| D | 4.70 | 4.90 | 5.10 |
| E | 5.80 | 6.00 | 6.20 |
| E1 | 3.70 | 3.90 | 4.10 |
| e | 1.27BSC | | |
| L | 0.50 | 0.65 | 0.80 |
| L1 | 1.05BSC | | |
| θ | 0 | -- | 8° |